Aquaculture

Industry brochure





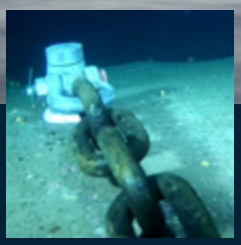

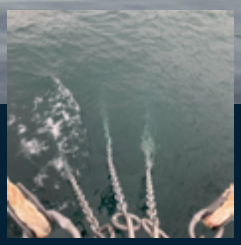

Engineered, high-performance mooring hardware for demanding marine environments

GUNNEBO® Industries

CMCO

Our history, experience and quality

Gunnebo Industries was founded in 1764 in the small town of Gunnebo in the south of Sweden. In the very beginning the company forged nails and bolts for ship-making but quickly expanded to make chains and lifting products.

For every problem there is a solution, and through innovation CMCO has established itself as a market leader in the lifting industry. We are very proud of our heritage, with the Gunnebo Industries brand that has been built on its wealth of industry experience that is second to none. These attributes give both customer and distributor piece of mind with the range of products Gunnebo Industries provides.

We understand that safety is of utmost importance, not only for the users of our products, but for the environment as well, a fish pen breakage would have significant impact on both the environment and the business it was part of.

It is of vital importance that the products used in the Aquaculture industry are manufactured to outperform the regulating standards.

CMCO has through its brand Gunnebo Industries a range of chains, shackles and mooring bolts designed specifically for the Aquaculture industry. These products are manufactured to exacting demands which ensure an extended product life, which will decrease the need for maintenance and give you peace of mind in even the roughest weather conditions.

It is of vital importance that the products used in the Aquaculture industry are manufactured to outperform the regulating standards.



Hot Dip Galvanized Welded Chain Sling

Gunnebo Industries' chain slings are made from a specific material standard that has been proven to comply with the required industry standards. They are welded and galvanized at our chain factory in Gunnebo, Sweden. The chain and master links are produced under our own quality control standards. In-house production allows us to increase our flexibility regarding lengths and lead times. Our HDG process is highly valuated in the aquaculture market for its smooth surface and high corrosion resistant.

- Flattened sections on the masterlink – make it quick and easy to fit thimbles.
- All parts are high quality Hot Dip Galvanized (HDG)*.
- 3rd party approval acc. to NS 9415.
- Short lead-time.
- Three components in one product – one inspection point – one certificate.
- High flexibility regarding lengths.
- No protruding parts.
- Available for LLZ- chain dimensions 16-22 mm.

* Hot Dip Galvanization according to EN 1461:2009 with an average coating thickness of at least 80 µm

Bridle for Aquaculture

Master link D x E x L (mm)	Tail Chain d x w1 x p (mm)	MBP (mt)
22x95x160	LLZ-16-6 16x28x100	24.7
	LLZ-19-6 19x28x100	34.8
	LLZ-22-6 22x36x120	42.5
28x110x190	LLZ-16-6 16x28x100	24.7
	LLZ-19-6 19x28x100	34.8
	LLZ-22-6 22x36x120	46.6
28x140x270	LLZ-16-6 16x28x100	24.7
	LLZ-19-6 19x28x100	34.8
	LLZ-22-6 22x36x120	46.6

3rd party approval acc. to NS 9415.

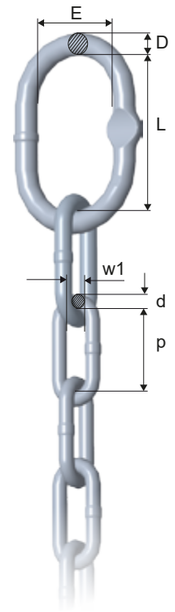

Aquaculture sling with oversize link

End link d x w1 x p (mm)	Tail Chain d x w1 x p (mm)	MBP (mt)
LLZ-22-6 22x36x120	LLZ-16-6 16x28x100	24.7
	LLZ-19-6 19x28x100	34.8

3rd party approval acc. to NS 9415.

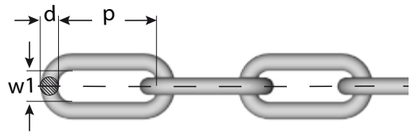

Mechanical Properties:

The mechanical properties of the connection link and master link is always as least as good as the chain. This includes:

- MBL (Minimum Breaking Load)
- Elongation
- Bend deflection



Hot Dip Galvanized Chain

Adverse weather and rough sea conditions, coupled with the harsh marine environment must be taken into consideration when you specify the correct equipment for your aquaculture facilities. Our HDG chain is designed to meet the specific demands from the global aquaculture industry.
The chains are made from a premium high quality steel sourced from European steel producers to exacting standards and specifications. We have worked very closely with our material suppliers to ensure close and exacting standards are maintained throughout all production batches. These materials are then converted into chain at our own factory in Gunnebo, Sweden, where every component is 100% inspected during the manufacturing process.
Each element within the manufacturing process is stringently controlled with our in house quality systems; this also applies to our galvanizing and importantly our heat treating procedures which are critical factors in chain performance. To prevent the risk of unwanted stress levels, each chain link is subjected to heat treating after calibration in order to reduce the in borne stress levels within it. Finally each chain link is visually inspected after calibration.
The ultimate corrosion protection process for steel components in the marine industry is hot dipped galvanizing, this is again controlled to recognized marine standards. Gunnebo Industries have been producing galvanized chains for more than 50 years.

Long Link Chain LLZ, Grade 6

Heat treatment
Quenched and tempered

Surface treatment
Hot Dip Galvanized (HDG)*

Marking
GF

Not for lifting purposes.

* Hot Dip Galvanization according to EN 1461:2009 with an average coating thickness of at least 80 µm

Art. No	Code	Link dimensions			Min. breaking load (tonnes)	Weight kgs/m	Delivery length
		D nom.	P »	W1 »			
Z802207	LLZ-13-6	13	80	21.1	16.3	2.9	1 x 229,5 m
GS1073	LLZ-16-6	16	100	28	24.7	4.6	1 x 200 m
Z801458	LLZ-19-6	19	100	28,5	34.8	6.5	1 x 120 m
Z801887	LLZ-22-6	22	120	35	46.6	8.7	1 x 50 m
Z802447	LLZ-25-6	25	140	39	60.0	12.0	1 x 50 m
Z802449	LLZ-28-6	28	150	39	75.3	14.9	1 x 50 m
Z802451	LLZ-32-6	32	170	44	98.3	19.0	1 x 50 m

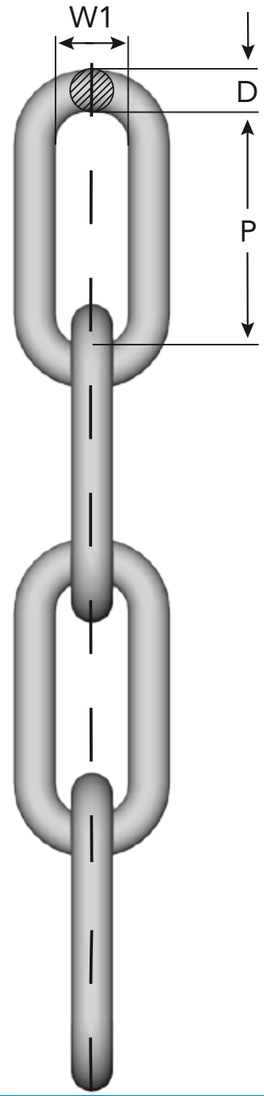

Corrosion protection by HDG
- More than 50 years of experience.
- Even and smooth surface results.

To prevent brittle fracture (reduced stress levels)
- Tension reveling process.
- A galvanizing process without acid pickling.

Quality
- In house production.
- Strict controls throughout the process.
- Third part type approval according to NS 9415.
- Visual inspection.

Dimensions in mm



Aqua Connecting Shackle

CMCO have improved shackles through continuous improvement to satisfy the exacting demands of the Aquaculture industry. To fulfil one of these demands we have added Aqua Connecting Shackle No 851 to our portfolio of aquaculture products.

Our Aqua Connecting Shackle No 851 has been developed specifically for the Aquaculture industry, with its unique feature of a counter sunk bolt which locks the shackle, and with increased material thickness in the bow we have improved the fatigue resistance. With all our Aquaculture shackles we are able to offer several securing options; standard clips or tailored.

Aqua Connecting Shackle No 851

Standard: Third party approved acc. to relevant Norwegian aquaculture standards

Material: High Tensile Steel. Quenched and Tempered, Grade 6

Finish: All parts Hot Dip Galvanized (HDG)* + brown color marking

Plastic clip provided as standard safety pin.

* Hot Dip Galvanization according to EN 1461:2009 with an average coating thickness of at least 80 µm

Art.no	D Trade size		MBL (tonnes)	A	C	E	D2	D1
	mm	inch						
A085122	22	7/8”	50	40	89	60	52	25
A085132	32	1 1/4”	100	57	115	75	72	35

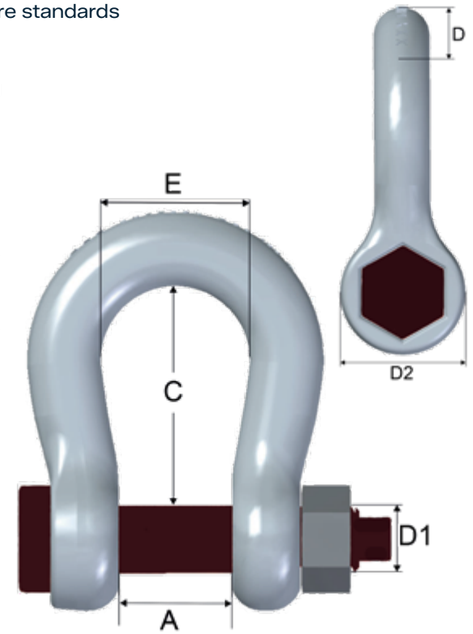

These sizes come with a sunken hexagon bolt head that will greatly reduce the risk of the bolt unscrewing during use as well as making the fitting easier for the user.



Customized securing options:

- Plastic covered seizing wire
- Plastic covered steel wire
- Stainless steel cotter pin
- Clips (50T – Yellow

Aqua shackle No. 851

- Sunken bolt locks into the shackle to prevent rotation (unintentional loosening of the nut).
- The sunken bolt also reduces the risk of the shackle interacting with the net.
- Fatigue resistance is increased by the addition of extra material in the bow (increased life span and safety).
- Dimensions according to EN 13889
- Easy to operate; Only one tool needed to assemble/disassemble.
- Hot dip galvanized pins (normally zinc plated) C/W grade 8 nuts.

Dimensions in mm

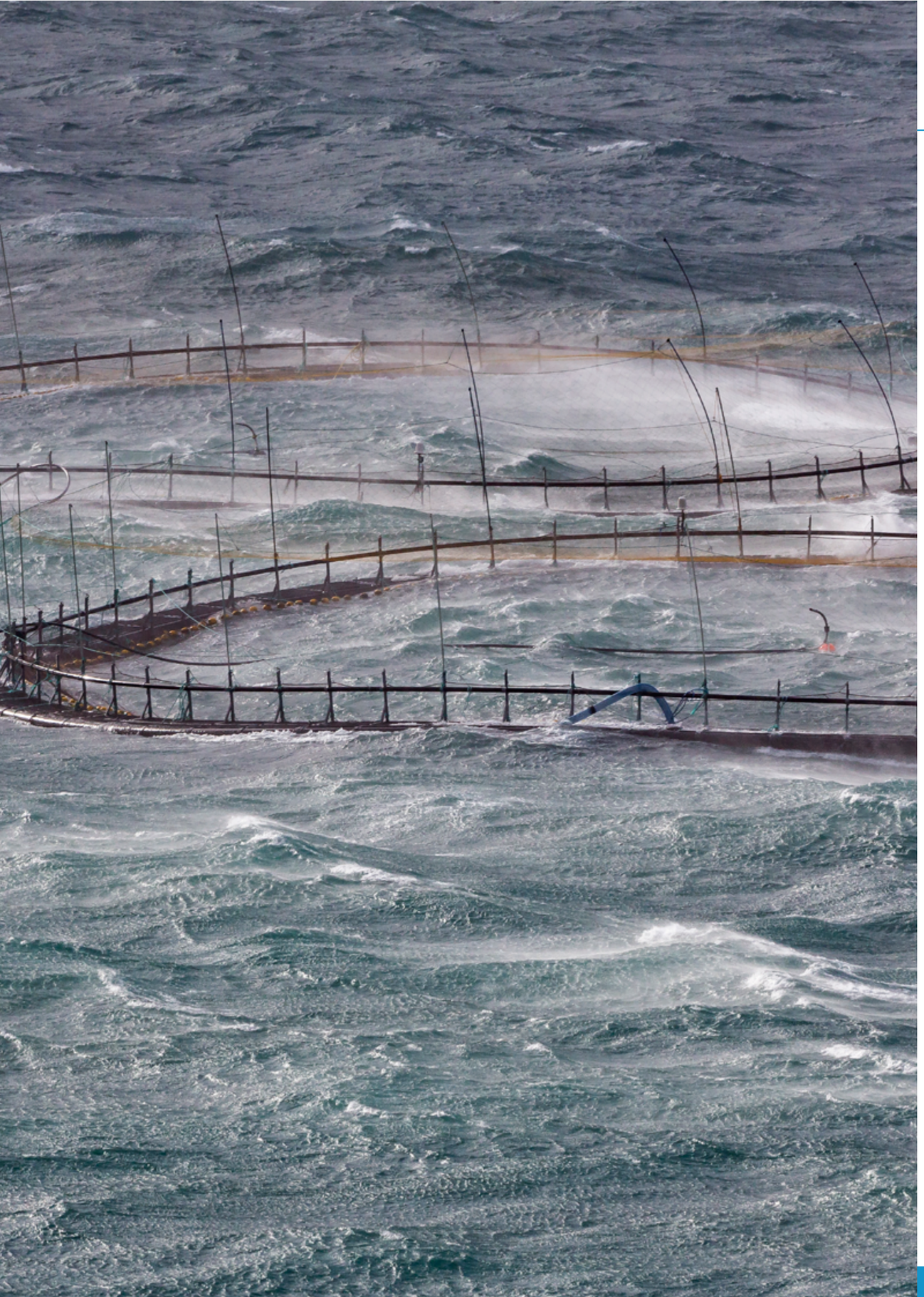

Mooring Shackle

Gunnebo Industries HDG shackles are designed to meet the specific demands from the global aquaculture industry. The shackles are produced from a grade of steel that has been developed to comply with the industry standards. Our modern manufacturing facilities in Norway are self-sufficient, from the initial tooling design and manufacture, through the component production facilities. All aspects of production are continually monitored at all stages: including forging, heat treatment, machining, hot dip galvanizing and final quality inspection. We have an extensive experience of shackle production using modern manufacturing methods.

Our Mooring shackle no. 852 has been developed specifically for the Aquaculture industry, with its unique feature of a counter sunk bolt which locks the shackle, and with increased material thickness in the bow we have improved the fatigue resistance. With all our mooring shackles we are able to offer several securing options; standard or tailored. For many years our unique no. 852 mooring shackle has been used extensively in the Aquaculture industry.

Gunnebo Industries have improved this type of shackle through continuous improvement to satisfy the exacting demands of the Aquaculture industry. To fulfil one of these demands we have added countersunk shackle type A0830 to our portfolio of aquaculture products. We offer countersunk shackles both in Dee and Bow form.

Mooring Shackle No 852

Standard: Third party approved acc. to relevant Norwegian aquaculture standards

Material: High Tensile Steel. Quenched and Tempered, Grade 6

Finish: All parts Hot Dip Galvanized (HDG)* + brown colour marking

* Hot Dip Galvanization according to EN 1461:2009 with an average coating thickness of at least 80 µm

Art.no	D Trade size		MBL (tonnes)	A	C	E	D2	D1
	mm	inch						
A085219	19	3/4”	28	44	100	58	48	22
A085222	22	7/8”	40	52	125	68	52	25
A085228	28	1 1/8”	60	62	150	89	64	28
A085232	32	1 1/4”	90	82	170	98	72	32
A085234	33	1 1/4”	95	82	170	98	72	32
A085244	45	1 3/4”	150	126	200	126	105	50

These sizes come with a sunken hexagon bolt head that will greatly reduce the risk of the bolt unscrewing during use as well as making the fitting easier for the user.

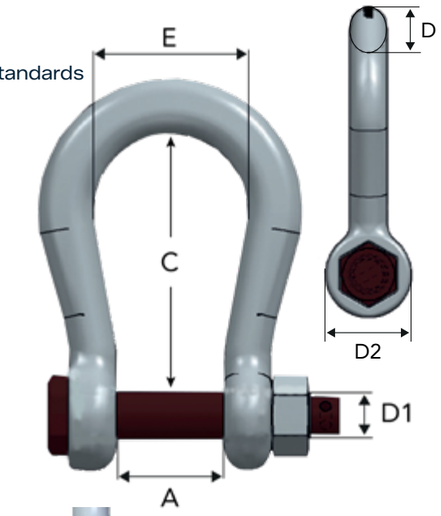

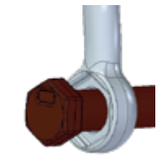

Securing options. Standard configuration may vary by size and market.

Art No.	Options
A9X100201	Steel Wire 250mm – Orange PVC Coating
A9X100202	Copper Wire 250mm – Yellow Green Coating
A9X100203	Cotter Pin 28t - 40t – Yellow
A9X100204	Cotter Pin 60t To 95t – Green



Mooring shackle No. 852

- Sunken bolt locks into the shackle to prevent rotation (unintentional loosening of the nut).
- The sunken bolt also reduces the risk of the shackle interacting with the net.
- Fatigue resistance is increased by the addition of 25% extra material in the bow (increased life span and safety).
- Spacious bow for connecting thimbles, rope and mooring/connecting plates.
- Easy to operate; Only one tool needed to assemble/disassemble.
- Hot dip galvanized pins (normally zinc plated) C/W grade 8 nuts.
- Increased MBL 90 T --> 95 T

Dimensions in mm

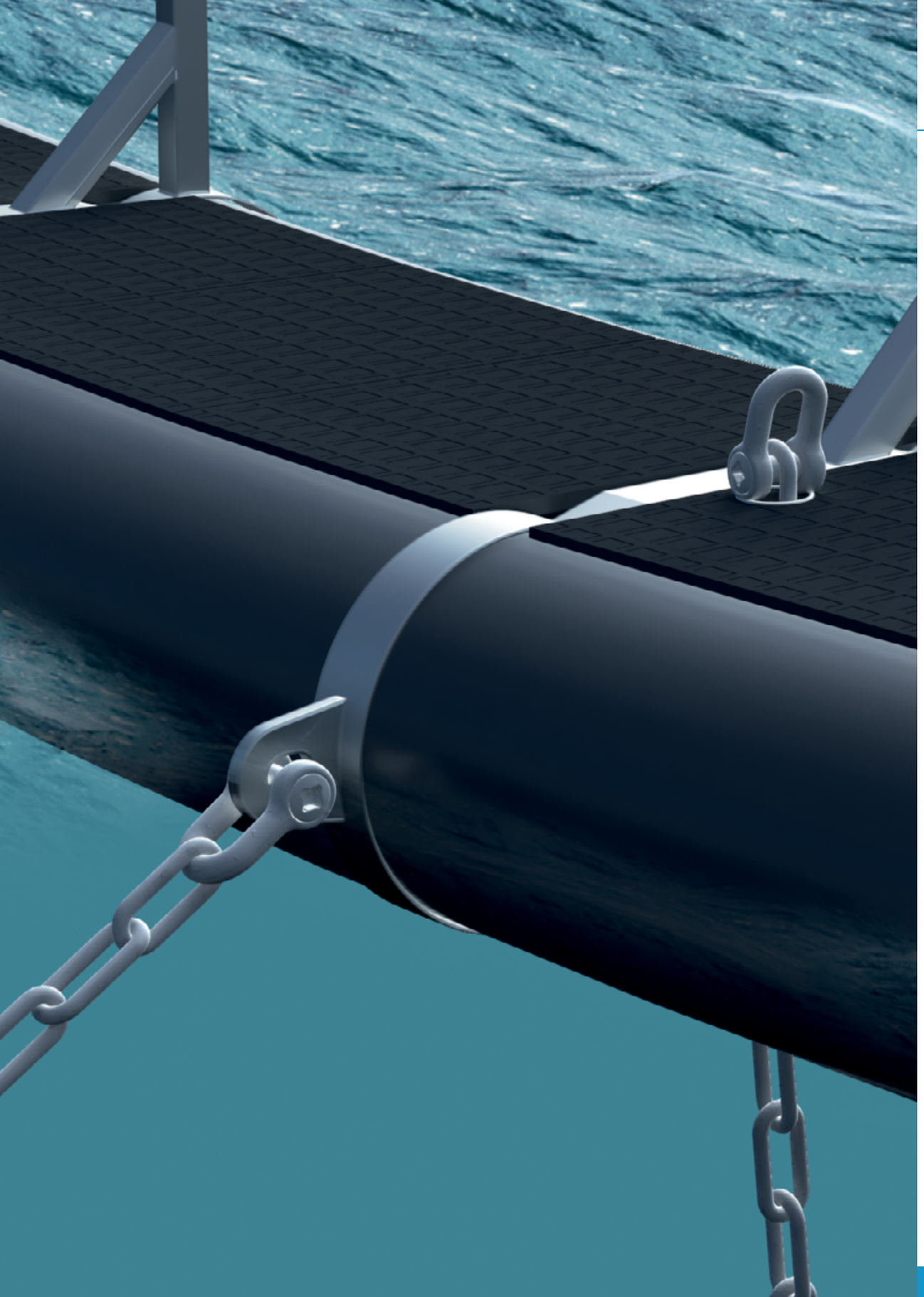

Countersunk Dee Shackle

Countersunk Shackle - Bow & Dee

Gunnebo Industries shackles are made from close tolerance high tensile steel and are quenched and tempered to comply with the most stringent specifications. All parts are hot dip galvanized and have a brown coat applied to the pin on top of the zinc layer.

- Countersunk hole ensures easy/good tightening.
- No risk to fowling the nets - No protruding parts.
- Connecting (between two chain links) shackle for chain.
- Shackle bolt to fit direct into ratchet, no extra tools or collets needed.
- 3rd party approved to acc. NS 9415.
- Hot dip galvanized pins (normally zinc plated).
- High quality HDG applied through stringent quality control.

Countersunk Dee Shackle No A0830

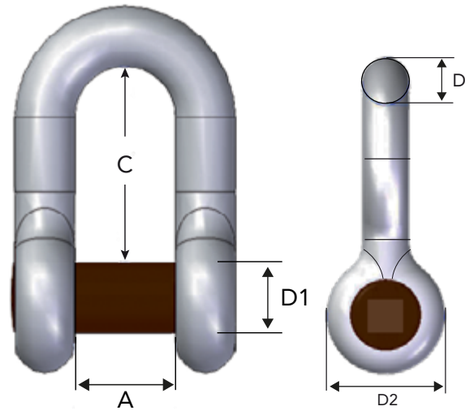

Standard: Dimensions acc. to EN 13889

Material: High Tensile Steel. Quenched and Tempered, Grade 6

Finish: All parts Hot Dip Galvanized (HDG)* + brown colour marking

* Hot Dip Galvanization according to EN 1461:2009 with an average coating thickness of at least 80 µm

Art.no	WLL (tonnes)	Dim. d (inch - mm)	D1	D	A	C	D2
A083013	2	1/2" - 13	16	1/2"	21	41	33
A083016	3.25	5/8" - 16	19	5/8"	27	51	40
A083019	4.75	3/4" - 19	22	3/4"	31	60	48
A083022	6.5	7/8" - 22	25	7/8"	37	71	52
A083025	8.5	1" - 25	28	1"	43	81	60

Countersunk Dee Shackles can also be supplied with a secondary securing for Double Protection (DP); A0830DP. Norwegian standard NS9415 require secondary securing (Double Protection) on shackles used in mooring applications.

Countersunk Dee Shackle No A0830DP

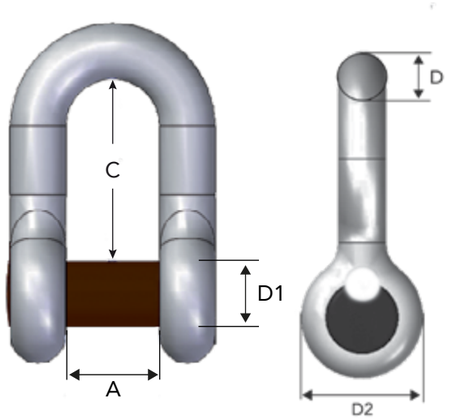

Dimensions in mm

Standard: Dimensions acc. to EN 13889. Third party approved acc. to relevant Norwegian aquaculture standards (NS 9415).

Material: High Tensile Steel. Quenched and Tempered, Grade 6

Finish: All parts Hot Dip Galvanized (HDG)* and a Double Protection plug in non-corrosion material

* Hot Dip Galvanization according to EN 1461:2009 with an average coating thickness of at least 80 µm

Art.no	WLL (tonnes)	Dim. d (inch - mm)	D1	D	A	C	D2
A083013DP	2	1/2" - 13	16	1/2"	21	41	33
A083016DP	3.25	5/8" - 16	19	5/8"	27	51	40
A083019DP	4.75	3/4" - 19	22	3/4"	31	60	48
A083022DP	6.5	7/8" - 22	25	7/8"	37	71	52
A083025DP	8.5	1" - 25	28	1"	43	81	60

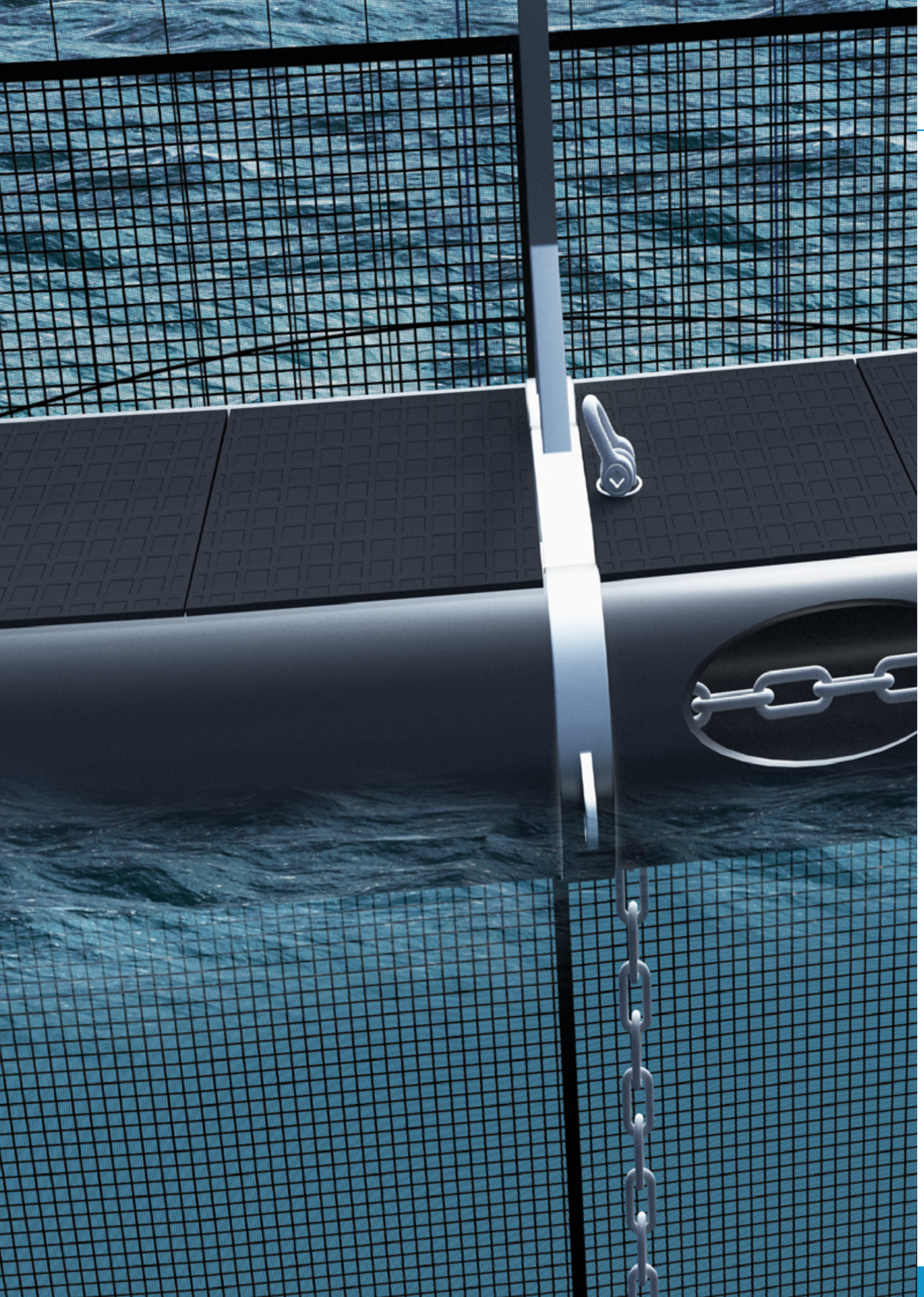

Countersunk Bow Shackle

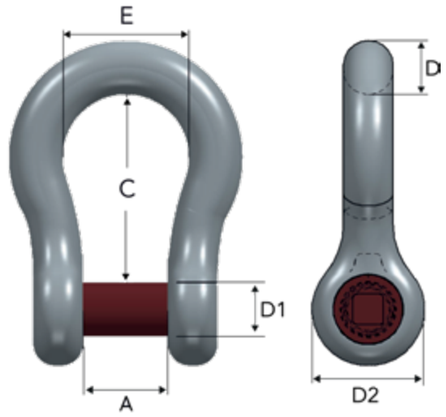

Countersunk Bow Shackle No A0850

Standard: Dimensions acc. to EN 13889

Material: High Tensile Steel. Quenched and Tempered, Grade 6

Finish: All parts Hot Dip Galvanized (HDG)*
+ brown colour marking

* Hot Dip Galvanization according to EN 1461:2009 with an average coating thickness of at least 80 µm

Art.no	WLL (tonnes)	Dim. d (inch - mm)	D1	D	A	E	C	D2
A085013	2	1/2" - 13	16	1/2"	21	33	41	33
A085016	3.25	5/8" - 16	19	5/8"	27	40	51	40
A085019	4.75	3/4" - 19	22	3/4"	31	48	60	48
A085022	6.5	7/8" - 22	25	7/8"	37	52	71	52
A085025	8.5	1" - 25	28	1"	43	60	81	60

Countersunk Bow Shackles can also be supplied with a secondary securing for Double Protection (DP); A0850DP. Norwegian standard NS9415 require secondary securing (Double Protection) on shackles used in mooring applications.

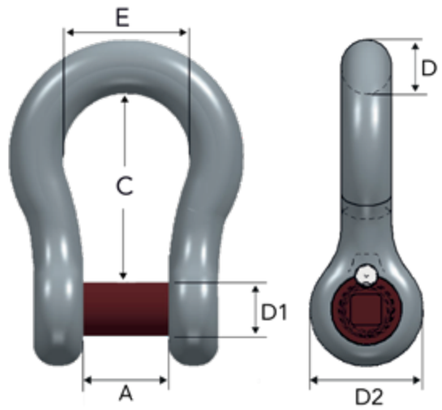

Countersunk Bow Shackle No A0850DP

Standard: Dimensions acc. to EN 13889. Third party approved acc. to relevant Norwegian aquaculture standards (NS 9415).

Material: High Tensile Steel. Quenched and Tempered, Grade 6

Finish: All parts Hot Dip Galvanized (HDG)* and a Double Protection plug in non-corrosion material

* Hot Dip Galvanization according to EN 1461:2009 with an average coating thickness of at least 80 µm

Art.no	WLL (tonnes)	Dim. d (inch - mm)	D1	D	A	E	C	D2
A085013DP	2	1/2" - 13	16	1/2"	21	33	41	33
A085016DP	3.25	5/8" - 16	19	5/8"	27	40	51	40
A085019DP	4.75	3/4" - 19	22	3/4"	31	48	60	48
A085022DP	6.5	7/8" - 22	25	7/8"	37	52	71	52
A085025DP	8.5	1" - 25	28	1"	43	60	81	60

Dimensions in mm

Mooring Bolt with Swivel and Shackle

Our swivel bolt solution allows the mooring bolt to have maximum rotation after the product is installed. This unique feature allows the connection to rotate as how the force is applied, reducing stress and removes chances for chain entanglement problems during and after the instalment.

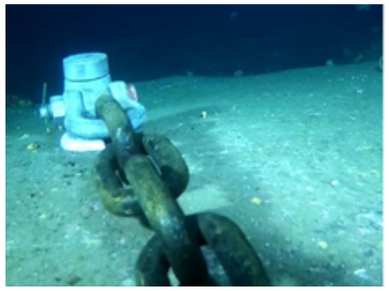

The innovative mooring bolt

- Swivel rotates 360˚ in horizontal direction.
- Designed to be compatible with the Aqua Connecting Shackle No 085132.
- The shackle is movable 180˚ in the vertical direction. Avoids skew loading on the shackle.
- Spacer ensures correct distance to the seabed/rock.
- Spacer is held in position with a rubber gasket during the assembly process
- Top nut secured with both threads and welding.

Mooring Bolt with Swivel

Standard: Third party approved acc. to relevant Norwegian aquaculture standards

Document Certified according to NS 9415

Material: High Tensile Steel. Quenched and Tempered, Grade 6

Finish: All parts Hot Dip Galvanized (HDG)* + brown color marking

* Hot Dip Galvanization according to EN 1461:2009 with an average coating thickness of at least 80 µm

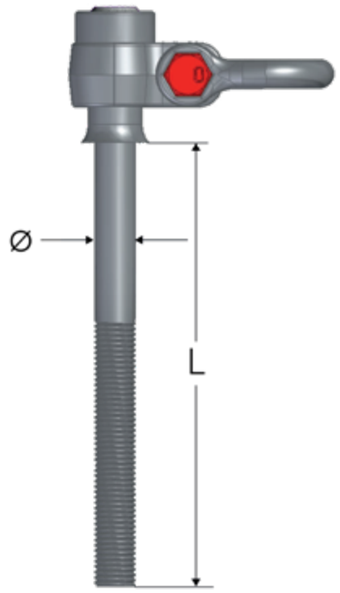

Art.no	MBL tonnes	Dim Ø x L
A825545	80	Ø45 x 500
A825550	100	Ø50 x 500
A825557	140	Ø57 x 650

The product comes delivered with the A085132 Connecting Shackle.

Clear marking with:
- Manufacturer name
- MBL
- Traceability code



Mooring bolt w/ Swivel and Shackle

- The swivel is designed to rotate horizontally 360˚ and the shackle to move vertically in 180˚.
- There is grooves in the lower part of the bolt, to ensure optimal fastening.
- The bolt is combined with swivel and a support plate that are all hot dip galvanized with 100my protection for optimal corrosion protection.
- Suitable for ROV installation.
- Traceability code on both bolt and swivel.
- Will always adjust to line direction

Dimensions in mm

With over 30 years as a market leader in the Norwegian aquaculture industry, Gunnebo Industries has continuously enhanced its products in close collaboration with end-users.

A newly improved version of the T-Bolt that simplifies assembly and reduces costs for ROV-operations.

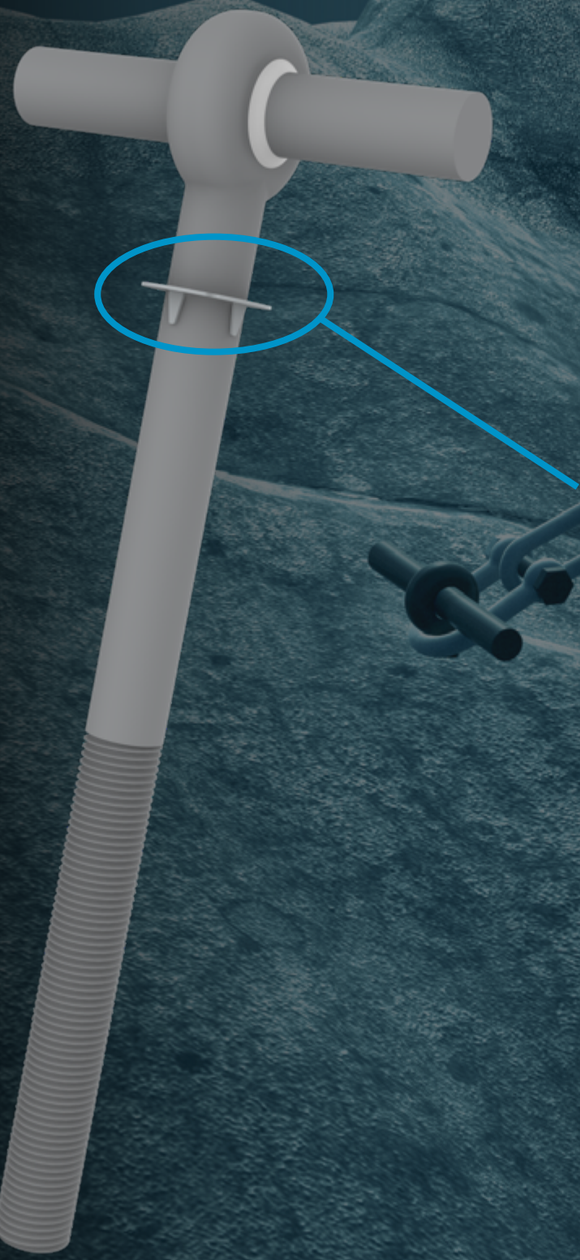

Gunnebo Industries Mooring bolt /T-bolt No 8257

- Range MBL 40-170 T
- 3rd party approved (acc. NS9415-2021)
- T-bolt flexible to secure straight/correct line direction
- User Instruction available

Permanent Depth Indicator

Makes assembly faster and safer in Remote Operating Vehicle operations.

Improved Marking

Marking on horizontal pin is visible even after installation in the sea bed.

Re-engineered for snap-over compatibility

Cross-pin engineered to securely snap over Gunnebo Industries mooring shackles and master links.

Mooring Bolt

Gunnebo Industries mooring bolts are made from high tensile steel and are quenched and tempered to comply with continuous monitoring and quality standards throughout manufacture. All parts are hot dip galvanized.

- Mooring bolts for cement fastening applications.
- Each bolt is clearly marked with its Minimum Breaking Load (MBL) and a traceability code (batch-number) for quality assurance.
- All parts are high quality hot dip galvanized.
- No A8257 – T-bolt flexible to secure straight/ correct line direction.
- Manufactured in our ISO 9001 certified factory in Norway.
- Comprehensive user instruction available

Mooring Bolt - T-bolt No 8257

Standard: Third party approved acc. to relevant Norwegian aquaculture standards (NS 9415-2021)

Material: High Tensile Steel. Quenched and Tempered, Grade 6

Finish: All parts Hot Dip Galvanized (HDG)*

* Hot Dip Galvanization according to EN 1461:2009 with an average coating thickness of at least 80 µm

Art.no	MBL tonnes	dim. Ø	L mm	L1 mm	G mm	E mm	T mm
A825232*	40	32	400	365	72	35	230
A825738	60	38	500	460	84	42	220
A825745	80	45	600	550	105	45	280
A825750	100	50	700	650	100	50	280
A825756	130	56	740	690	127	50	270
A825765	170	65	735	680	147	58	260

* Not available with depth indicator.

Dimensions in mm

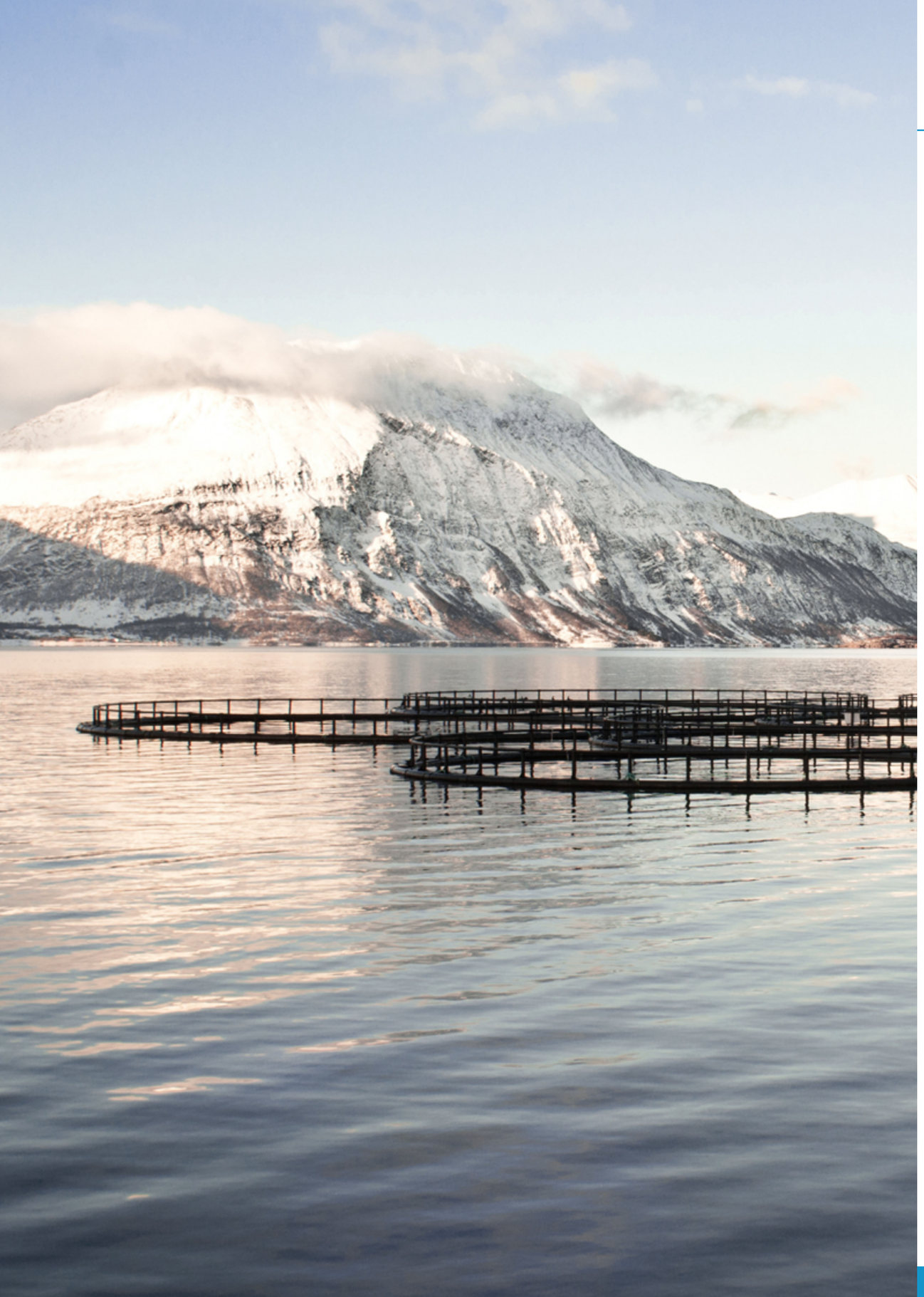

Galvanized Master Link

Our master links are made from a specific quality steel grade to comply with the most stringent of aquaculture standards. Our modern workshops in both Sweden and Norway are self-sufficient and are fully compliant with continuous monitoring of quality and performance at all stages of components production.

- Hot Dip Galvanizing is the industry standard for long term protection in the marine environment.
- Flattening bow to make it easy to put on thimbles.
- High quality HDG.
- 3rd party approved acc. to NS 9415.

Galvanized Master Link

Standard: Certified to Norwegian standard NS 9415

Material: High Tensile Steel. Quenched and Tempered, Grade 6

Finish: All parts Hot Dip Galvanized (HDG)*

* Hot Dip Galvanization according to EN 1461:2009 with an average coating thickness of at least 80 µm

Art.no	MBL	dim Ø - D	B	L	Weight
A825822	42,5 T	Ø22	95	160	1.5
A825828	65 T	Ø28	110	190	2.8
A825828L	50 T	Ø28	145	275	3.9
A825832	80 T	Ø32	145	275	5.1
A825840	120 T	Ø40	140	270	8.0
A825845	150 T	Ø45	180	340	12.9

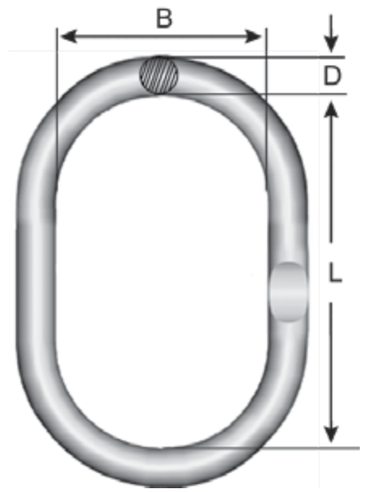

- Hot Dip Galvanizing is the industry standard for long term protection in the marine environment.
- Flattening bow to make it easy to put on thimbles.
- High quality HDG.
- 3rd party approved acc. to **NS 9415**.

Dimensions in mm

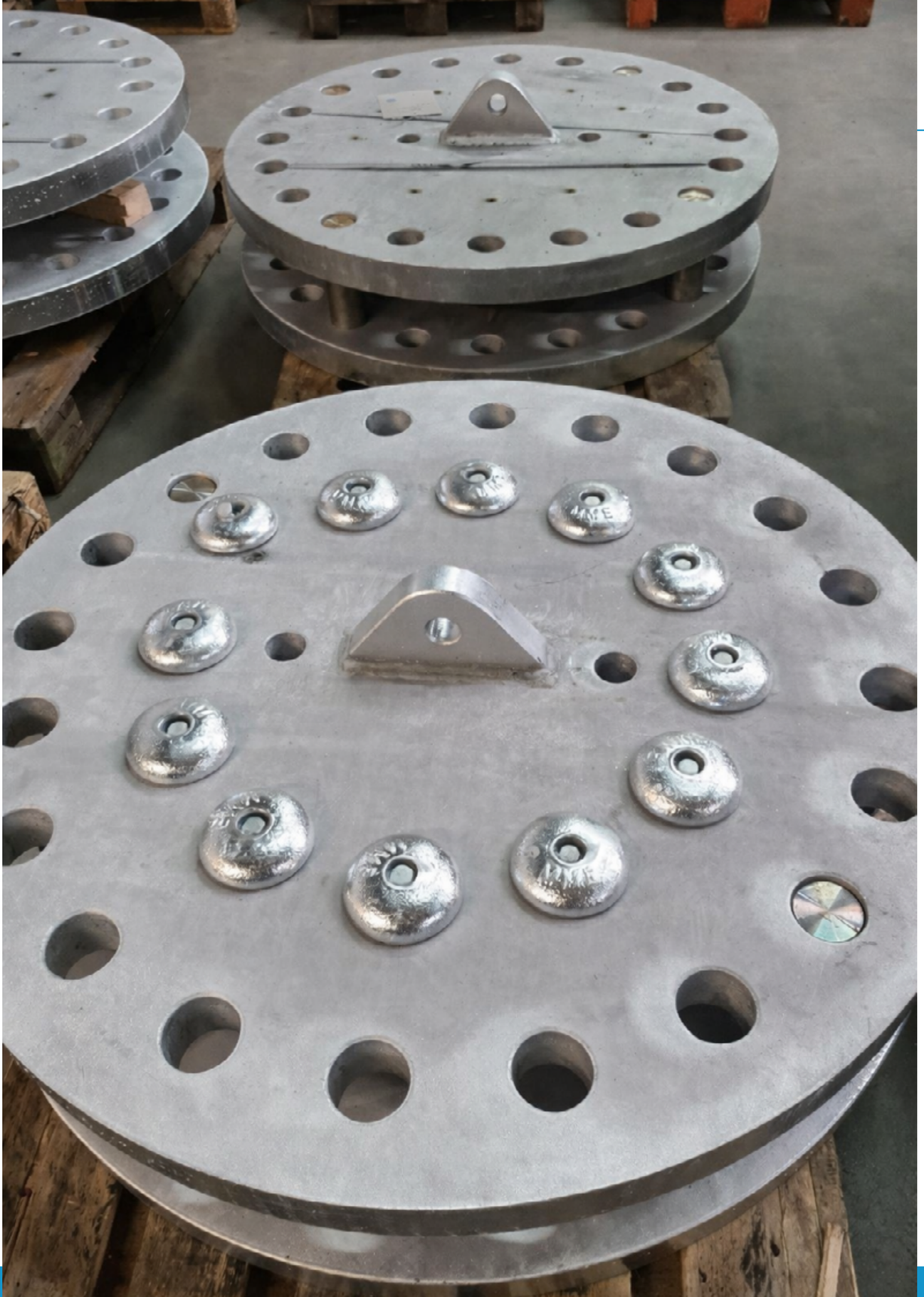

TXCPR Connection Plate

Manufactured at our ISO9001 certified factory in the Netherlands, the TXCP uses the latest robotic welding machines to give an outstanding products.

- Fitted with zinc anodes as standard to reduce corrosion.
- Mounting holes make installation and inspectin easier.
- Available in 3 sizes as standard to give the installer as much flexibility as possible during design and installation.
- High quality steel gives excellent metallurgical properties.
- The TXCP is fully galvanized for corrosion resistance.
- Certified to NS9415.

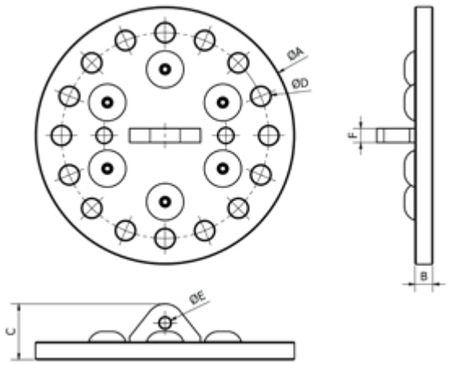

TXCPR Connection Plate

Standard: Certified to NS9415

Material: High Tensile Steel

Finish: Hot Dip Galvanized (HDG)*

* Hot Dip Galvanization according to EN 1461:2009 with an average coating thickness of at least 80 µm

Art.no	MBL tonnes	Weight kg	Holes qty	Dimensions mm					
				A	B	C	D	E	F
2785776	100	86	16	585	40	148	38	37	40
2785768	150	160	16	730	50	158	54	32	40
2785778	200	389	20	1040	60	168	61	32	40

Dimensions in mm

TXCP Connection Plate

Manufactured at our ISO9001 certified factory in the Netherlands, the TXCP uses the latest robotic welding machines to give an outstanding products.

- Fitted with zinc anodes as standard to reduce corrosion.
- Mounting holes make installation and inspectin easier.
- Available in 3 sizes as standard to give the installer as much flexibility as possible during design and installation.
- High quality steel gives excellent metallurgical properties.
- The TXCP is fully galvanized for corrosion resistance.
- Certified to NS9415.

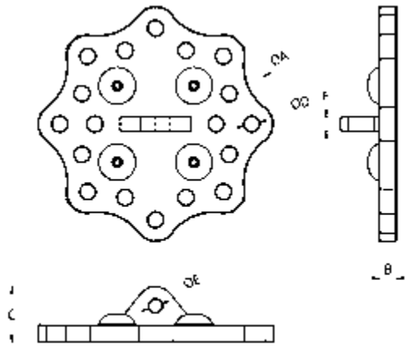

TXCP Connection Plate

Standard: Certified to NS9415

Material: High Tensile Steel

Finish: Hot Dip Galvanized (HDG)*

* Hot Dip Galvanization according to EN 1461:2009 with an average coating thickness of at least 80 µm

Art.no	MBL tonnes	Weight kg	Holes qty	Dimensions mm					
				A	B	C	D	E	D
2785700	50	28.5	8	410	30	138	36	37	30
2785709	100	56.5	12	527	40	148	39	37	40
2785759	100	72	16	572	40	148	39	37	40
2785718	150	114	16	680	50	158	46	37	40



Dimensions in mm

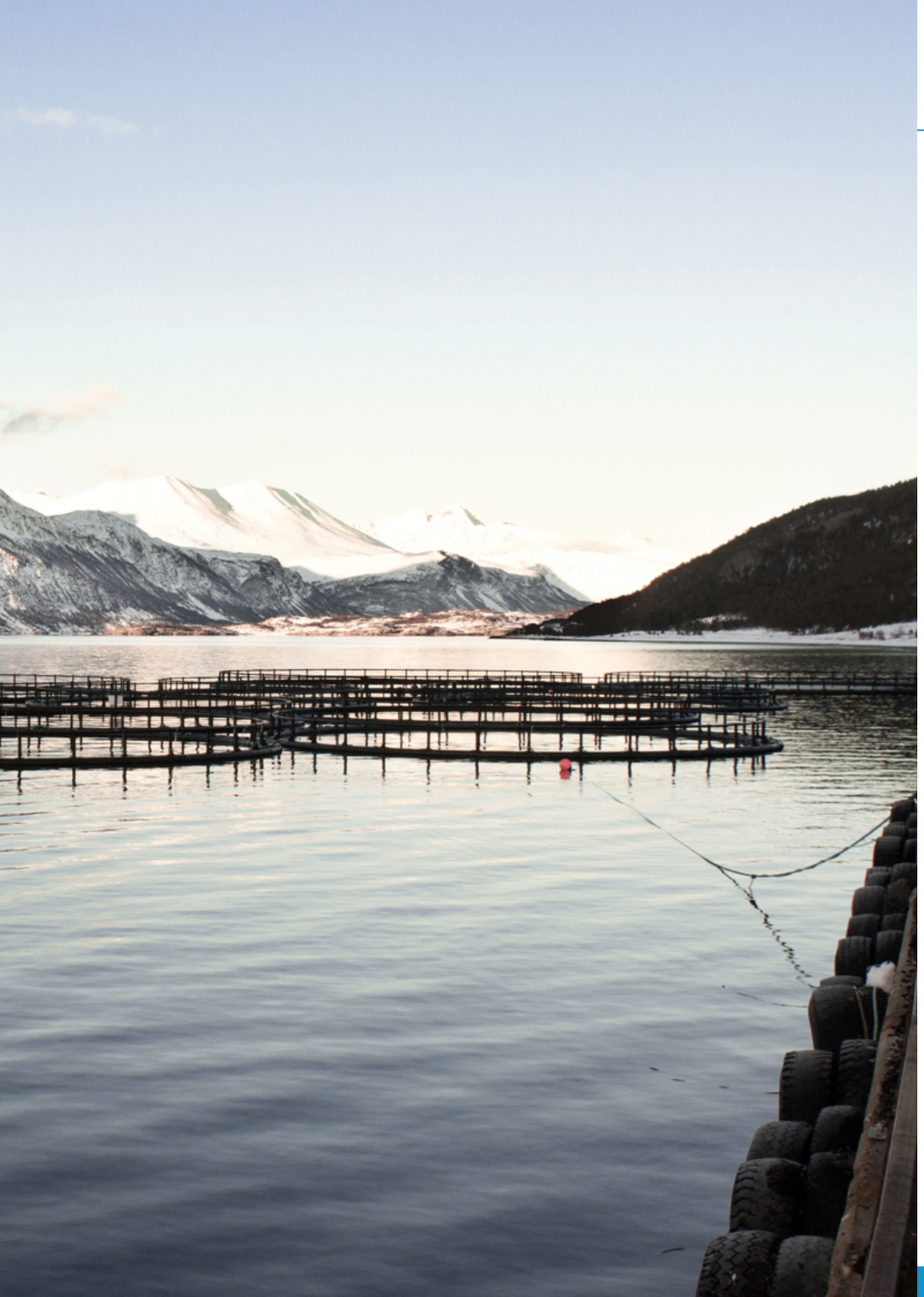

Bow Shackle No 855

Gunnebo Industries shackles are made from close tolerance high tensile steel and are quenched and tempered to comply with the most stringent specifications. All parts are hot dip galvanized and have a brown coat applied to the pin on top of the zinc layer.

- Test certificate and traceable raw material/inspection according to EN-10204 -3.1. DNV 2.7-1 and DNV 2.7-3 Type Approval.
- Third party approved acc. to NS 9415

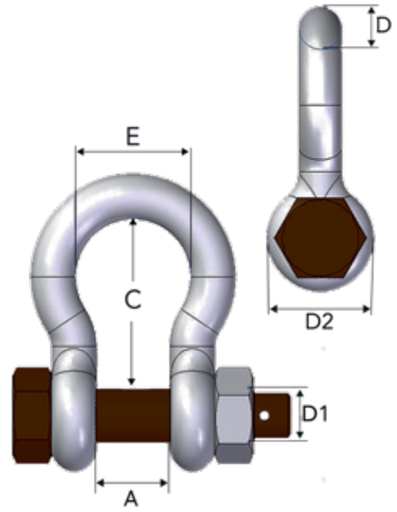

Bow Shackle No 855

Standard:	DNV 2.7-1 type approved, EN-13889 and U.S. Fed. Spec. RR-C-271
Material:	High Tensile Carbon Steel. Quenched and Tempered, Grade 6
Finish:	All parts Hot Dip Galvanized (HDG)* + brown painted bolts on top of galv.
Safety factor	6:1

* Hot Dip Galvanization according to EN 1461:2009 with an average coating thickness of at least 80 µm

CE

Art. no. Safety bolt	WLL tonnes 6:1	Dim. D1	D Trade size		inner width A*	inner length C*	Bow width E	Eye outer D2	Safety bolt kg
			mm	inch					
A085513	2.0	16	13	1/2”	21	47	33	33	0.42
A085516	3.25	19	16	5/8”	27	60	42	40	0.70
A085519	4.75	22	19	3/4”	31	71	49	48	1.20
A085522	6.5	25	22	7/8”	37	84	60	52	1.70
A085525	8.5	28	25	1”	43	95	68	60	2.58
A085528	9.5	32	28	1 1/8”	46	108	74	64	3.40
A085532	12.0	35	32	1 1/4”	52	119	83	72	4.80
A085535	13.5	38	35	1 3/8”	57	132	89	76	7.00
A085538	17.0	42	38	1 1/2”	60	146	98	84	9.00
A085545	25.0	50	45	1 3/4”	74	178	127	105	15.00

* Forging tolerance: +/- 5% on inside width/length.

Split pin included

Dimensions in mm

Intelligent Motion

About CMCO

CMCO is a global leader in intelligent motion solutions designed to advance performance and productivity, helping customers move the world forward with confidence. Guided by its mission to deliver innovative solutions with unmatched safety, quality and reliability, CMCO enables efficient lifting, positioning, securing and movement of materials across a wide range of end markets. Its portfolio spans five key platforms: lifting hardware consumables, hoists and cranes, precision conveyance, automation and linear motion. Driven by a vision for a safer, more productive tomorrow, CMCO partners with customers to solve some of their most complex intralogistics challenges and keep industry in motion. Comprehensive information is available at cmco.com. Gunnebo Industries is a brand of CMCO.



9992021 09/26

© 2026 CMCO. All Rights Reserved.